Operación de Máquinas de Termoformado

Conalep San José Iturbide

Sheet 7

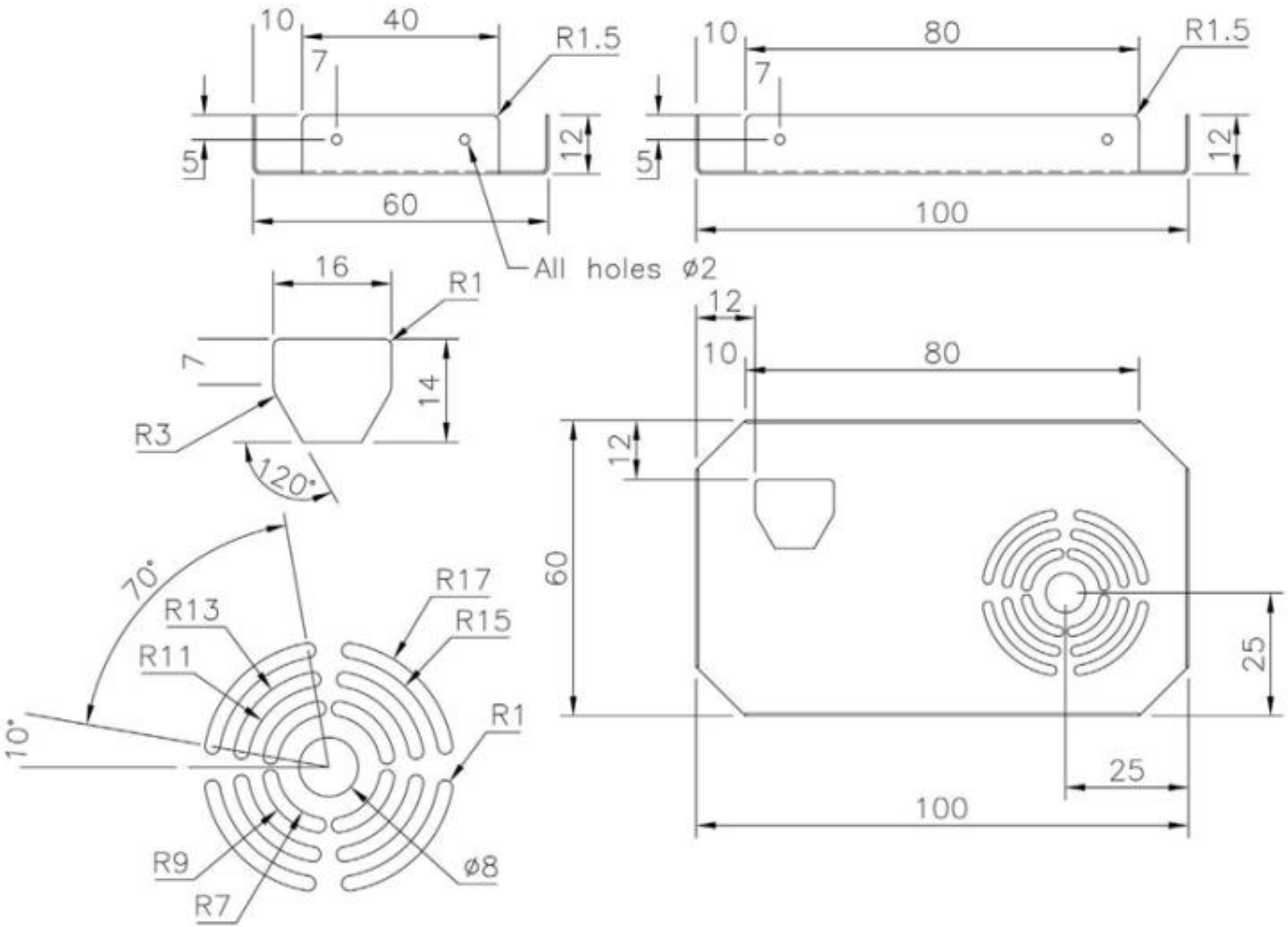
10
40
7
R1.5
5
12
60
All holes ø2
10
80
7
R1.5
5
12
100
16
R1
7
14
R3
120°
12
10
80
12
60
25
25
100
70°
R13
R17
R15
R11
R1
10°
R9
ø8
R7

Sheet 8

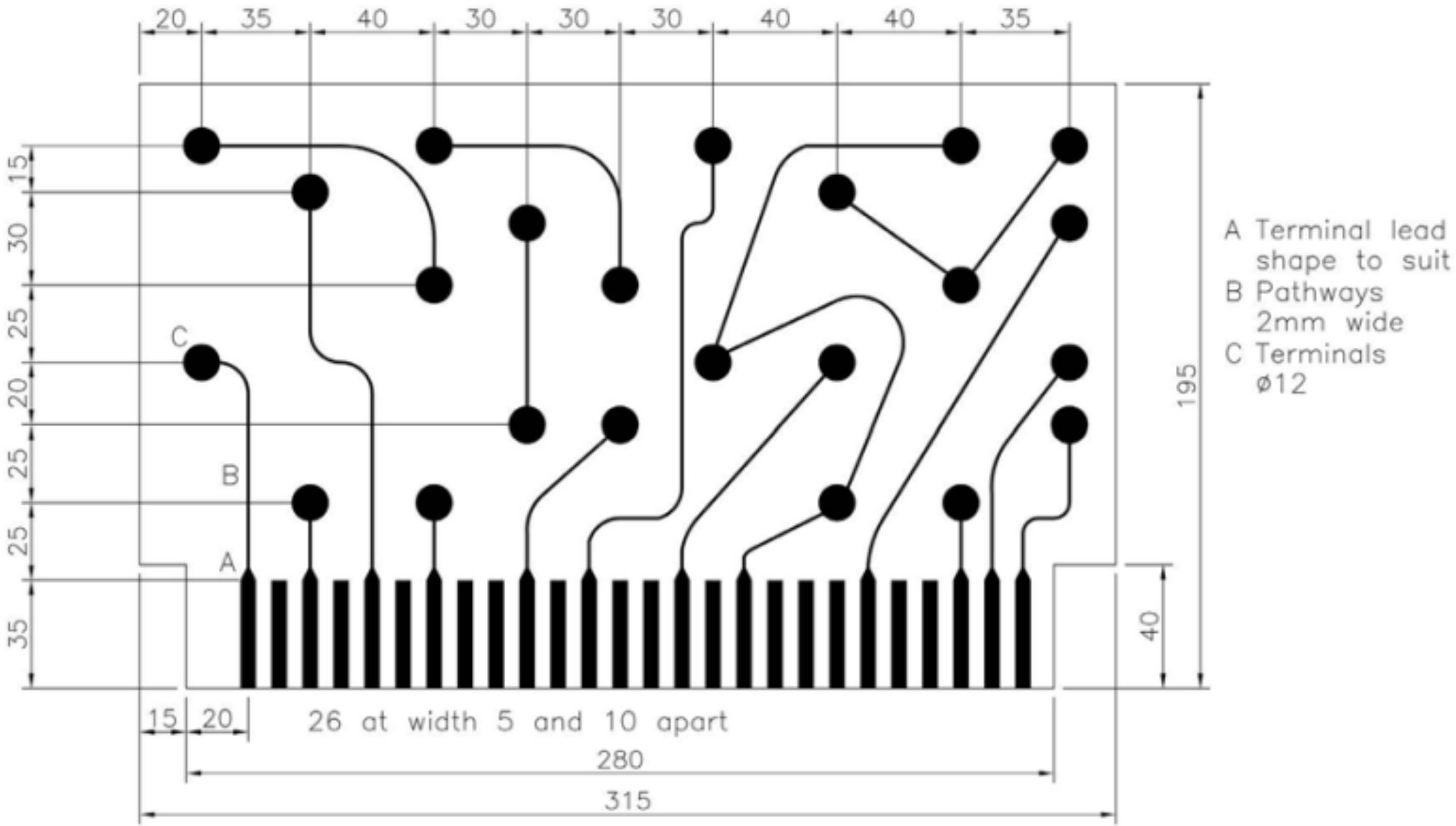
20
35
40
30
30
30
40
40
35
15
30
25
20
25
25
35
C
B
A
195
40
15
20
26 at width 5 and 10 apart
280
315
A Terminal lead shape to suit
B Pathways 2mm wide
C Terminals ø12

Sheet 8

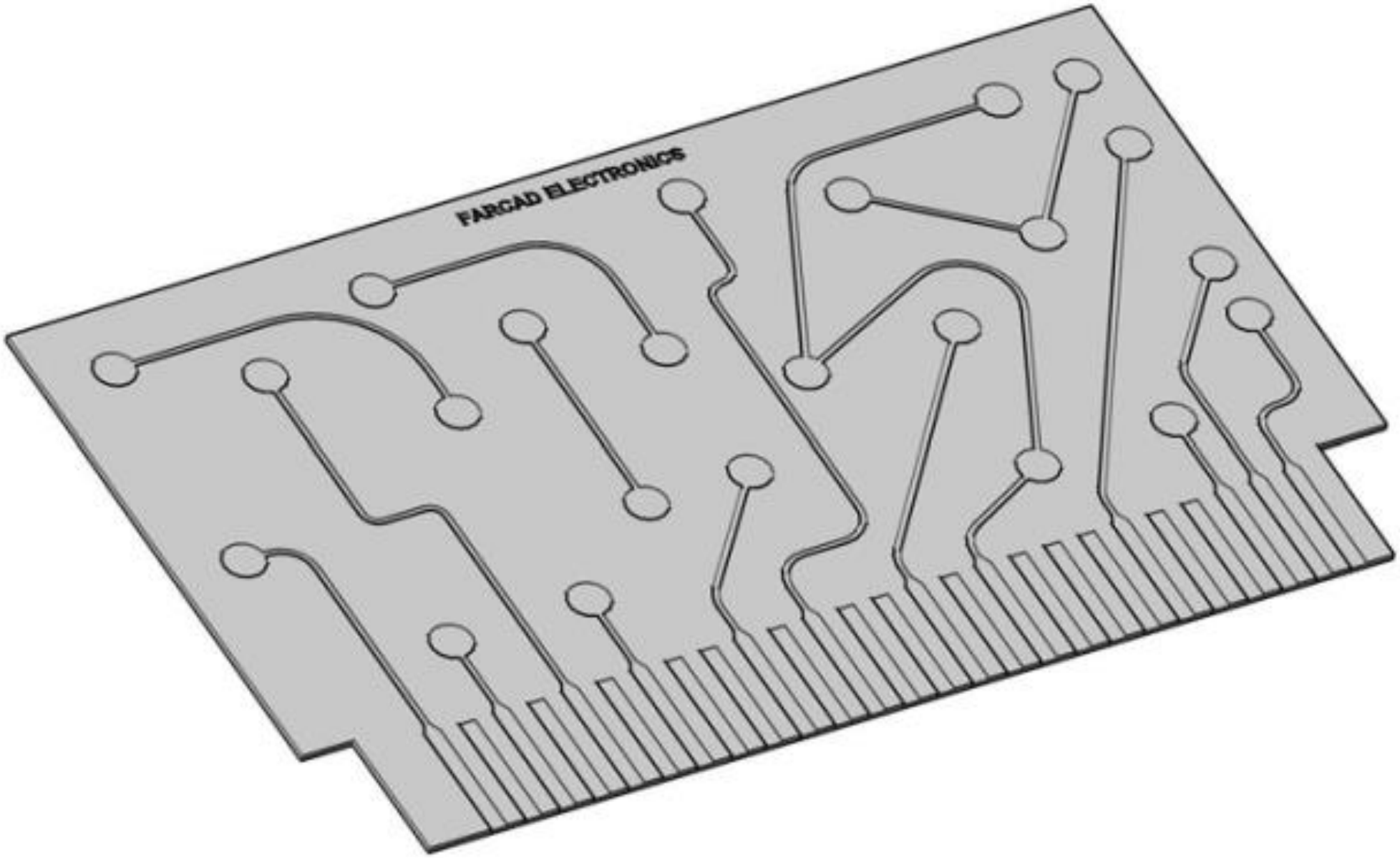

Sheet 9

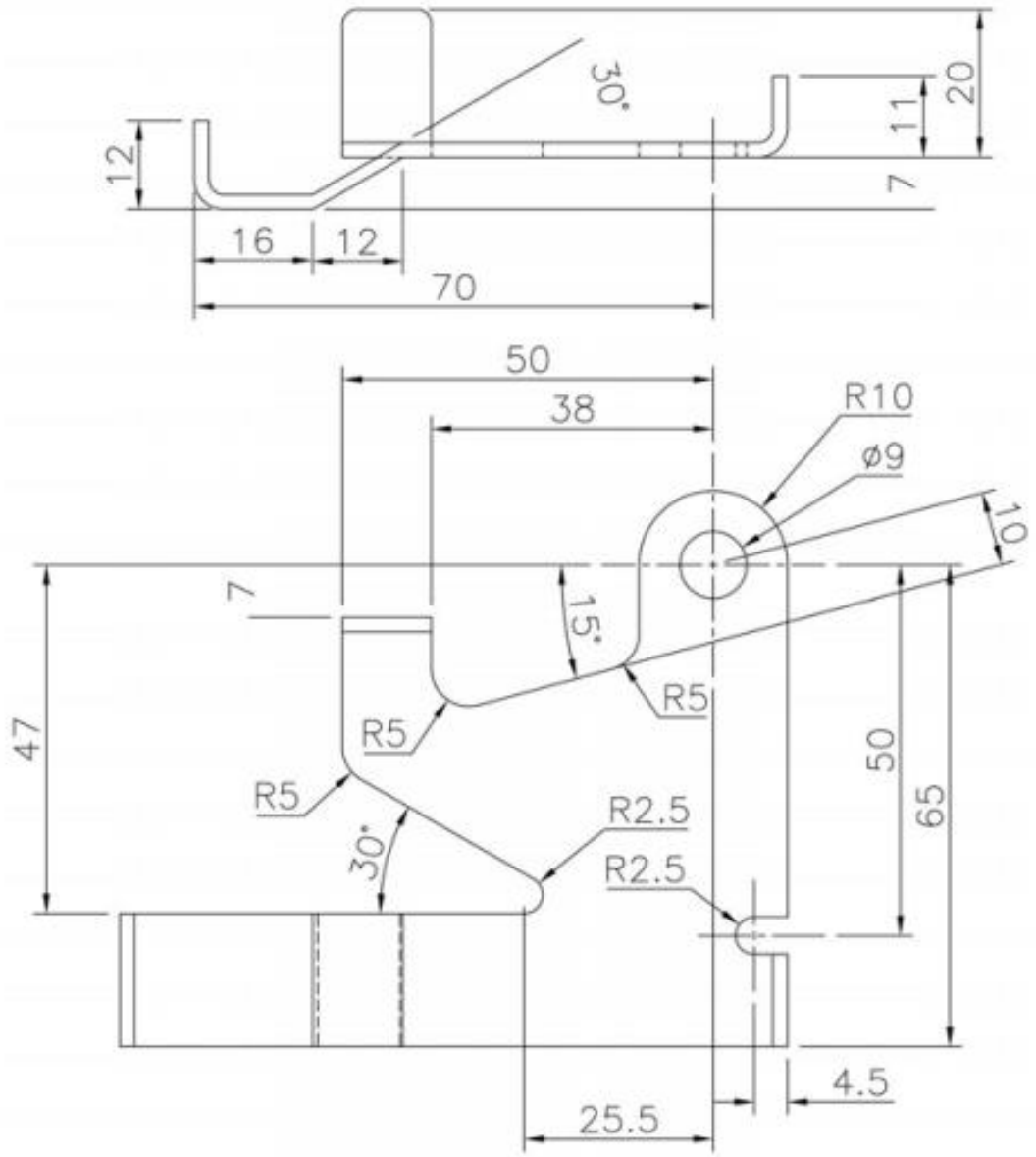
30°
20
11
12
7
16
12
70
50
38
R10
ø9
10
7
15°
R5
R5
R5
47
50
65
R2.5
R2.5
30°
4.5
25.5

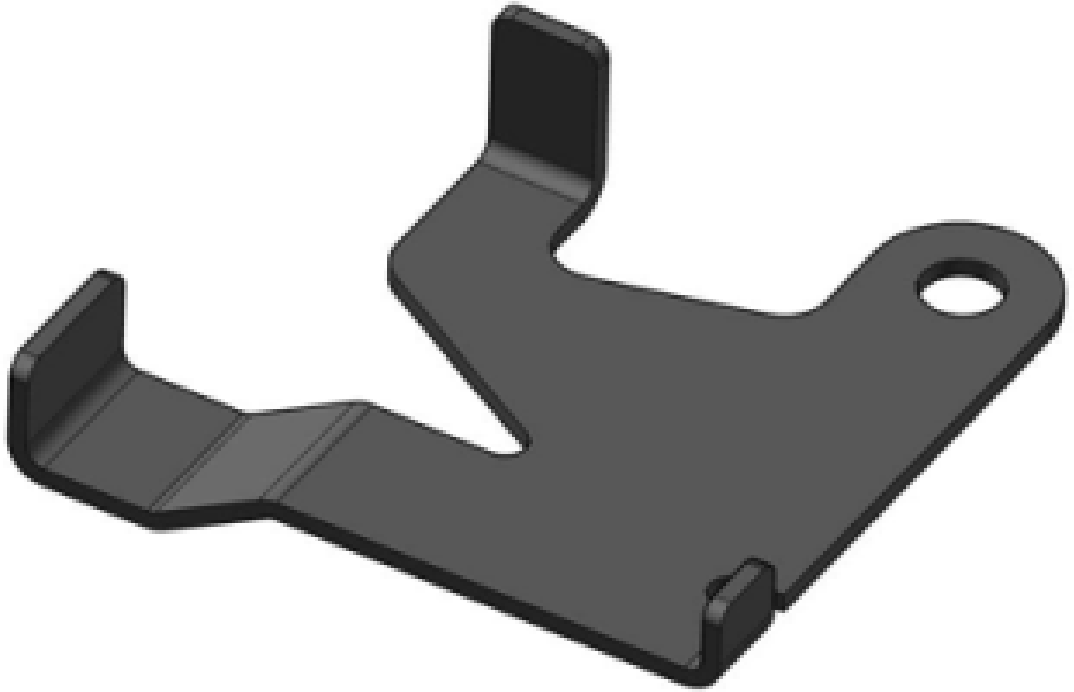
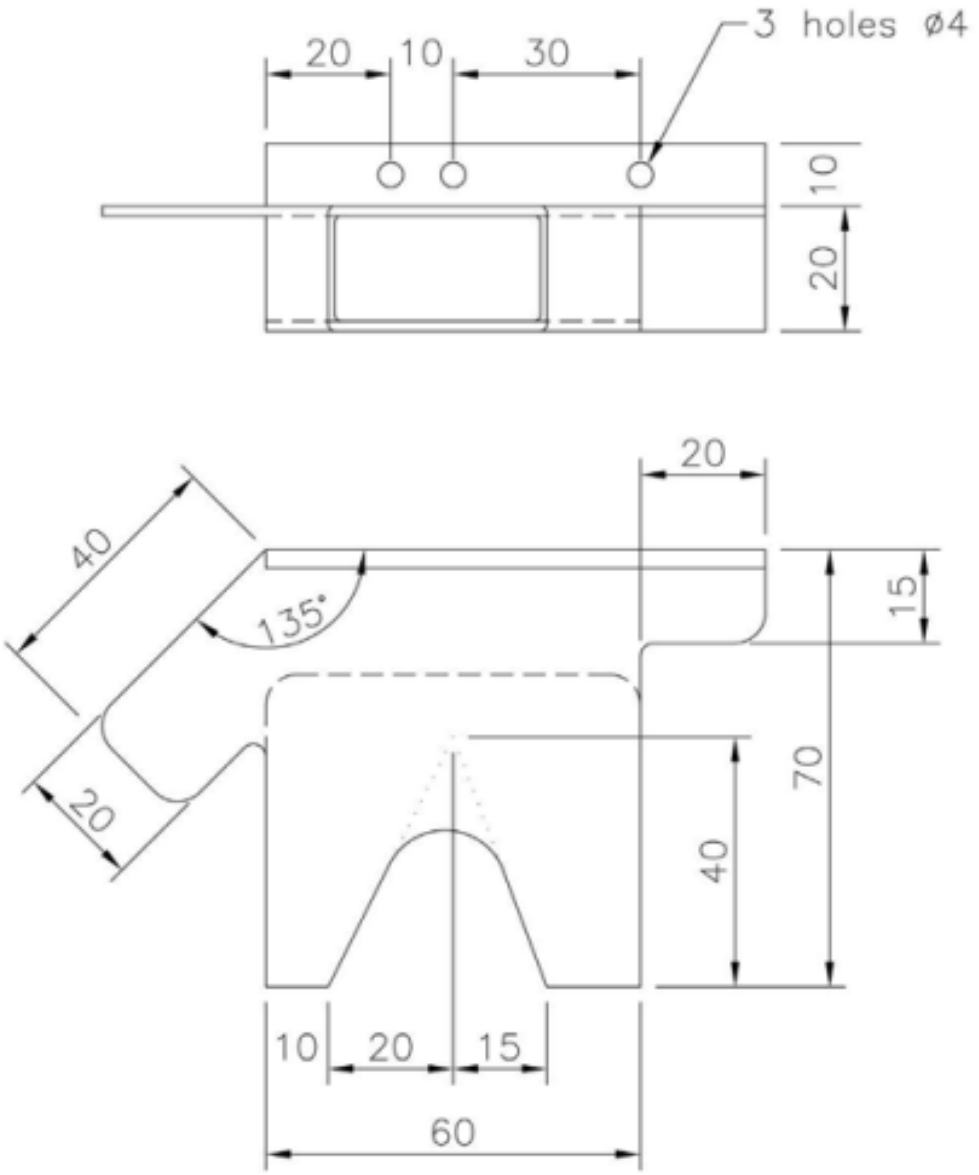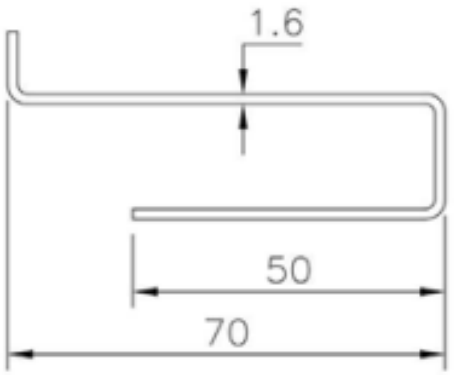
Sheet 10